CARRYBOY®

The Name of Quality and Design.

STAINLESS STEEL SIDE STEP

CB-764-CNPD

INSTALLATION **NISSAN NP300 D-CAB**

PART INSTALLATION

❶	❷	❸	❹
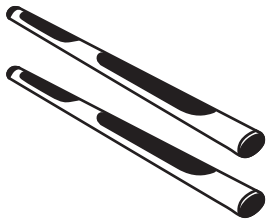 STAINLESS STEEL SIDE STEP 2 SETS.	LEG BRACKET 6 PCS.	NUTS & ORING SPING WASHER M8 12 Sets.	BOLT & ORING SPING WASHER M6 12 Sets.

INSTALLATION TOOLS

WRECH 13

T-WRECH 13

STEP 1

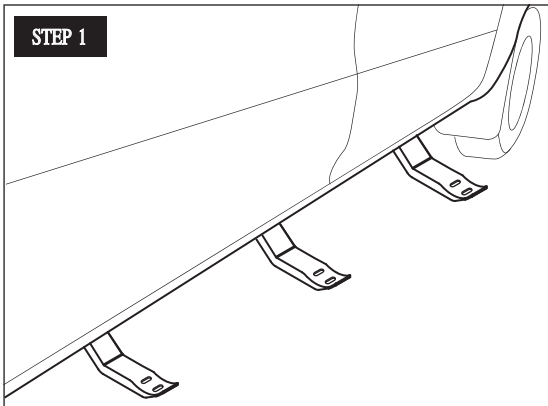

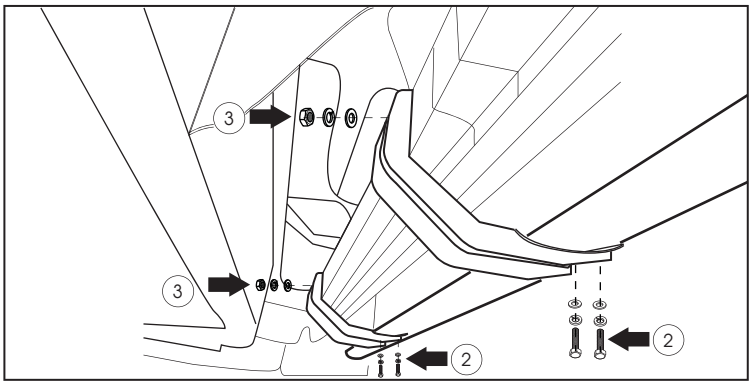

STEP 2

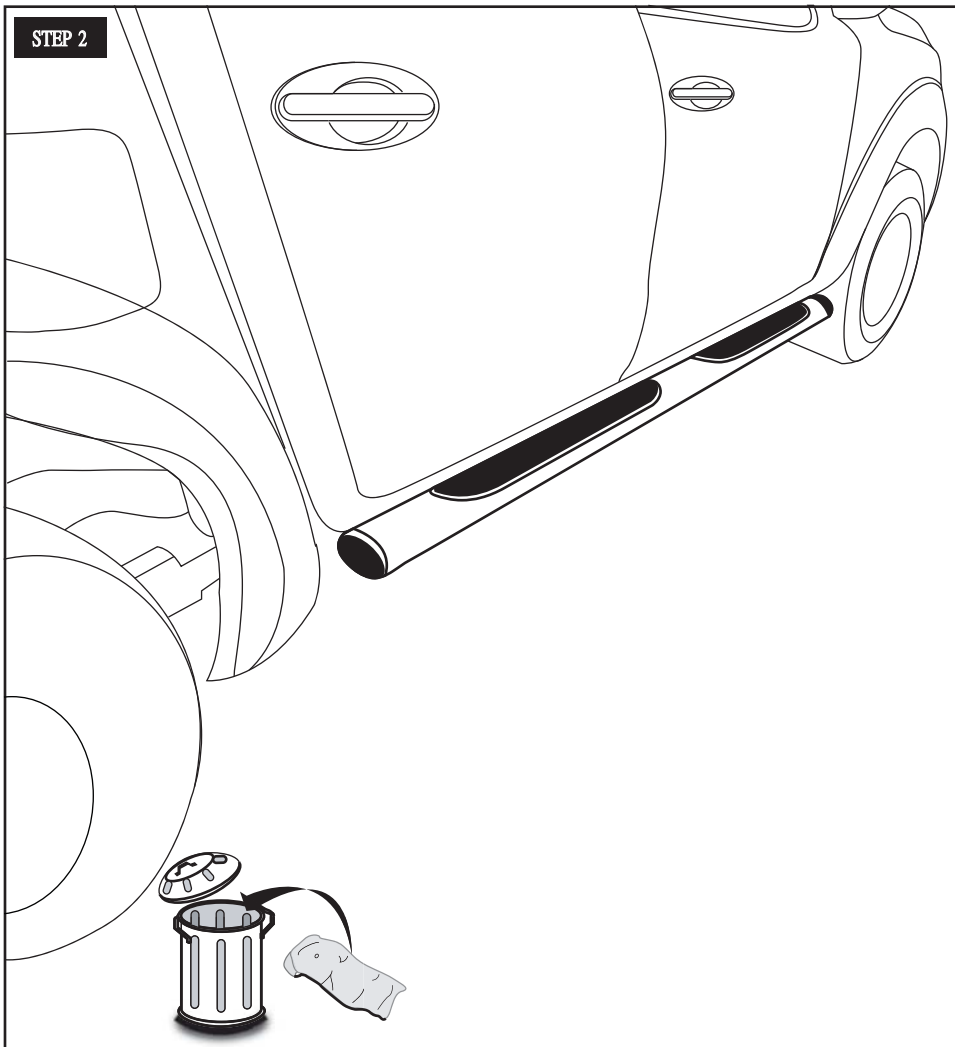

DETAIL LEG BRACKET R/L 6 PCS.

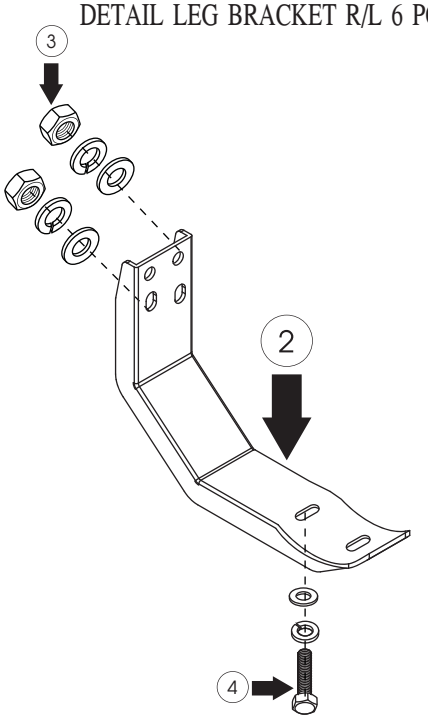

PLASTIC RECYCLE

P-764I-CNPD
RIVISE:00
19-01-58